0 2 4 6 8 10 12 14 16 18 20m

NORTH

KEY

FENCING:

- 1.8m HIGH CLOSE BOARD TIMBER FENCE TO SITE BOUNDARY AND PRIVACY SCREEN BETWEEN PLOTS TO END OF PATIO. GRAVEL BOARD UP TO 150mm ABOVE FINISHED GROUND LEVEL.
- EXISTING METAL FENCING TO NORTH ROAD
- 2.5m HIGH CLOSE BOARD TIMBER FENCE
- EXISTING MAGNESIUM LIMESTONE WALL, HEIGHT approx. 1m ABOVE STREET LEVEL, HEIGHT TO SITE SIDE VARIES 1 - 1.6m RELATIVE TO EXISTING SITE LEVELS
- 1.8m TIMBER GATE (DESIGN TBC)

SURFACE FINISHES:

- SOFT LANDSCAPING
- PLOT DRIVEWAYS & VP: Marshalls Key Block 60 Paving - Colour: Natural Or similar approved.
- PRIVATE PATH FINISH: Marshalls Symphony Plus Classic Colour: Stone Dark Grey Or similar approved.

PLOT FINISHES:

RED FACING BRICK - Ibstock Millhouse Blend

ROOF TILES:
Marley Eternit Edgemere interlocking slate like concrete tile - smooth grey or similar approved

OTHER EXTERNAL MATERIALS:

WINDOWS - LIGHT GREY / BEIGE OLD FARM STYLE UPVC

GUTTERS AND DOWNPIPES - BLACK UVC

FASCIA / SOFFIT - BLACK UPVC

Easement - Approximate location from Portland Consulting Information

The section of guardrail in this location will require a bespoke and / or socketed removable section of guardrail to allow access to the BT box near the field access.

40.0m

NORTH ROAD

59m visibility splay

metal railings

bus shelter

17.1m splay due to bus shelter

existing lamp pos

58m splay taking dwelling into account

Plot 1
Type A
bikes
compliant 2 spaces

Plot 2
Type A
bikes
compliant 2 spaces

Plot 3
Type A
bikes
compliant 2 spaces

Plot 4
Type C

Plot 5
Type C

vp
vp

bin standing

DON GARDENS

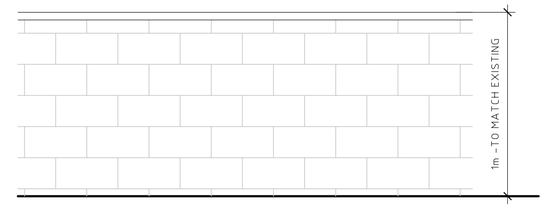

EXISTING MAGNESIUM LIMESTONE WALL.
WHERE THEY ARE ANY NEW OPENINGS MATERIAL IS TO BE SALVAGED AND USED AS INFILL ELSEWHERE ALONG THE BOUNDARY.
MAKE GOOD AND REPAIR AS NECESSARY

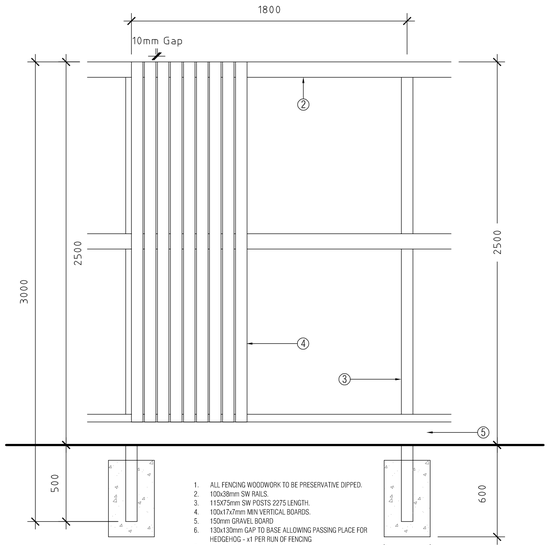

1. ALL FENCING WOODWORK TO BE PRESERVATIVE DIPPED.
2. 100x38mm SW RAILS.
3. 115X75mm SW POSTS 2275 LENGTH.
4. 100x17x7mm MIN VERTICAL BOARDS.
5. 150mm GRAVEL BOARD.
6. 130x130mm GAP TO BASE ALLOWING PASSING PLACE FOR HEDGEHOG - x1 PER RUN OF FENCING
7.

POSTS SET IN CONCRETE SPECIFIED AND SIZED BY FENCING CONTRACTOR TO SUIT GROUND CONDITIONS AND RESIST REQUIRED OVERTURNING FORCES

2500mm HIGH CLOSE BOARDED TIMBER FENCE TO BOUNDARY SHARED WITH FOOTBALL PITCHES

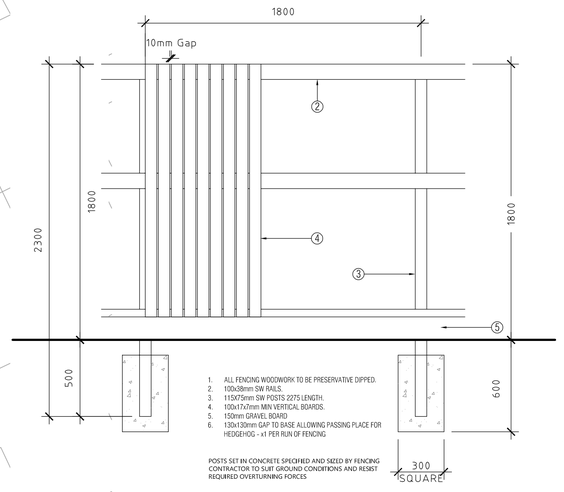

1. ALL FENCING WOODWORK TO BE PRESERVATIVE DIPPED.
2. 100x38mm SW RAILS.
3. 115X75mm SW POSTS 2275 LENGTH.
4. 100x17x7mm MIN VERTICAL BOARDS.
5. 150mm GRAVEL BOARD.
6. 130x130mm GAP TO BASE ALLOWING PASSING PLACE FOR HEDGEHOG - x1 PER RUN OF FENCING

POSTS SET IN CONCRETE SPECIFIED AND SIZED BY FENCING CONTRACTOR TO SUIT GROUND CONDITIONS AND RESIST REQUIRED OVERTURNING FORCES

1800mm HIGH CLOSE BOARDED PRIVACY TIMBER FENCE TO BOUNDARY AND BETWEEN PLOTS - TO END OF PATIO.

Rev.	Date	Details	Drawn	Checked
H	13.09.23	FENCES BETWEEN PLOTS 2 & 3 REVISED	CB	-
G	12.09.23	FENCE LINES REVISED AS PER CLIENT REQUIREMENTS	CB	-
F	27.04.23	DISCHARGE TO CONDITIONS AMMENDMENTS	JS	-
E	22.06.22	BOUNDARY TREATMENTS TO ACCESS SET BACK 1M	ST	-
D	27.05.22	DRAWING UPDATED TO SUIT UPDATED SITE PLAN	ST	-
C	22.02.22	DRAWING UPDATED TO SUIT UPDATED SITE PLAN	ST	-
B	20.04.21	PLOTS 1 - 2 NOW INCLUDE BLOCK PAVED DRIVES. PLOT 5 BLOCK PAVED DRIVE TO START AT	ME	SB
		PLOT 4 FRONT ELEVATION. MESH FENCING OMITTED. 2.5M FENCE PROPOSED. EXISTING		
		METAL FENCING INDICATED. ADDITIONAL FENCING TO PLOT 1 TO SIT BEHIND EXISTING		
		METAL FENCING. RADIUS TO DON GARDENS OMITTED. BLOCKING PAVING AND PRIVATE PATH		
		MATERIALS REVISED. ALL TO CLIENT COMMENT.		
A	31.03.21	ISSUED FOR APPROVAL PRIOR TO FORMAL PLANNING SUBMISSION	ME	SB

Issued for:

PLANNING

Project/Client:
FORMER WEST BOLDON SCHOOL SITE FOR TELMAC DEVELOPMENTS

Project No:
IANC 200110

Dwg No:
(00)350

Rev:
H

Drawing:
PROPOSED EXTERNAL FINISHES, BOUNDARY TREATMENTS & FENCE TYPES

Scale:
1:200 @A1

Drawn By: ME Date: 31.03.21

Checked By: SB Date: 31.03.21

NORR
8th Floor, Percy House, Percy Street, Newcastle, NE1 4PW
T: +44 (0)191 222 1116 F: +44 (0)191 222 1119
www.norr.com

Contractors must work only to figured dimensions which are to be checked on site.
© NORR CONSULTANTS LIMITED. An Ingenium International Company